未注公差/General tolerances(mm)														
0 ~ 3	>3 ~ 6	>6 ~ 10	>10 ~ 18	>18 ~ 30	>30 ~ 50	>50 ~ 80	>80 ~ 120	>120 ~ 180	>180 ~ 250	>250 ~ 315	>315 ~ 400	>400 ~ 500	>500	0.1/10
±0.12	±0.18	±0.22	±0.26	±0.31	±0.37	±0.57	±0.80	±0.93	±1.05	±1.15	±1.60	±2.20	±2.50	±2°

REV	ECN	DESCRIPTION	DRFT	DATE

DB250S — 3.5 — XXP — C

(Series No.) (Pitch) (Poles)

(Color):GN:(Green), BK:(Black), BU:(Blue), RD:(Red), GY:(Gray)
OG:(Orange), WT:(White), YL:(Yellow), CR:(Clear)

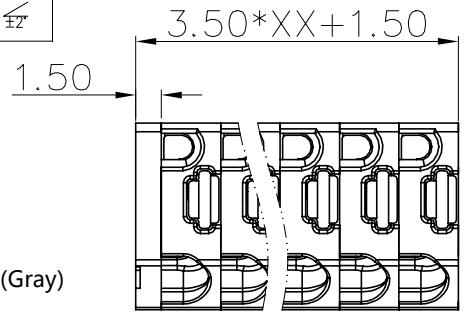

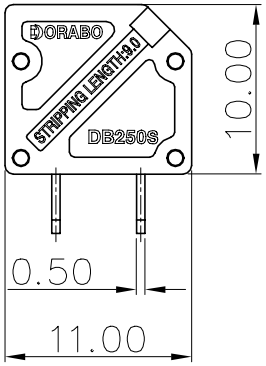

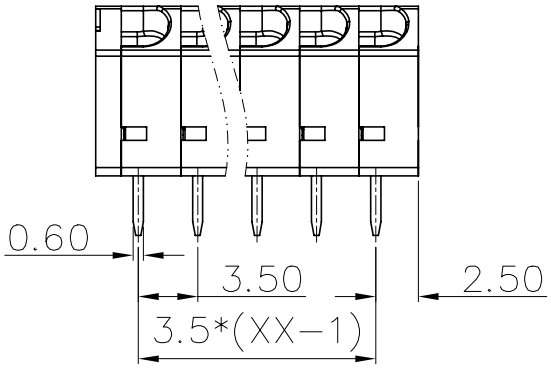

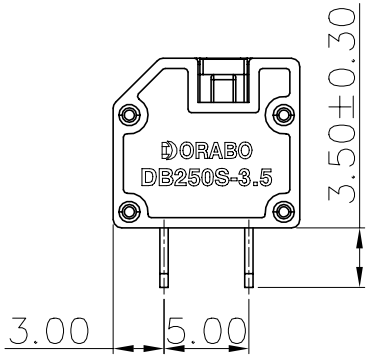

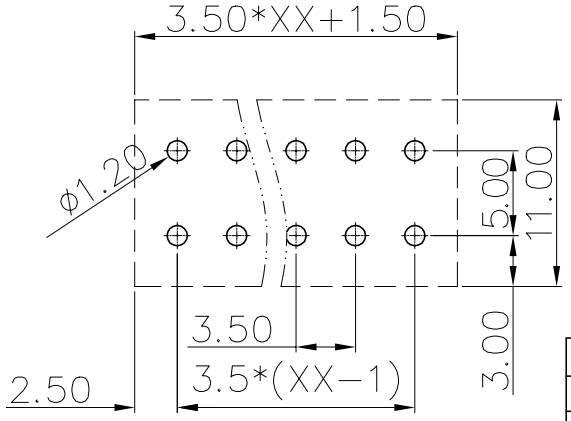

PCB LAYOUT

Spring	Stainless Steel	/
Conductor	Copper alloy	Sn Plated
Button	PA66	UL94V-0
Insulator	PA66	UL94V-0
NAME OF PART	MATERIAL	NOTES

UL 标准/UL Standard:	B	C	D
额定电压/电流/Rated Voltage(V)/Current(A)	300/5	/	300/5
IEC 标准/IEC Standard:			
过压类别/Overvoltage Category/污染等级/Pollution Degree	Ⅲ/3	Ⅲ/2	Ⅱ/2
额定电压/电流/Rated Voltage(V)/Current(A)	160/17.5	250/17.5	400/17.5
额定脉冲电压(KV)/Rate Impulse Voltage(KV)	2.5		
螺丝扭矩/Torque Tightening(N·m/Lb.in)	/		
线径范围(硬线和软线)/Wire Range(rigid and flexible)(mm^2/AWG)	0.2~1.5/26~16		
间距/Pitch(mm)/线数范围/Poles	3.5/XX=02~24P		
剥线长度/Stripping length(mm)	8~9		
使用温度范围/Operating temperature(°C)	−40~+105		
符合RoHS环保要求/Conform to RoHS	Yes		

MAT NO.: /	DORABO 宁波地博电气有限公司 NINGBO DORABO ELECTRICAL CO., LTD		
STATUS: /			
APPD: MARK 2024.07.03	NAME: DB250S−3.5−XXP−C		
CHKD: MARK 2024.07.03			
DRFT: MARK 2024.07.03	DRAWING NO.: /	REV	M0
SIZE: A4 mm (inch)	TYPE: CUSTOMER_DRAWING	SCALE:	SHEET 1/1